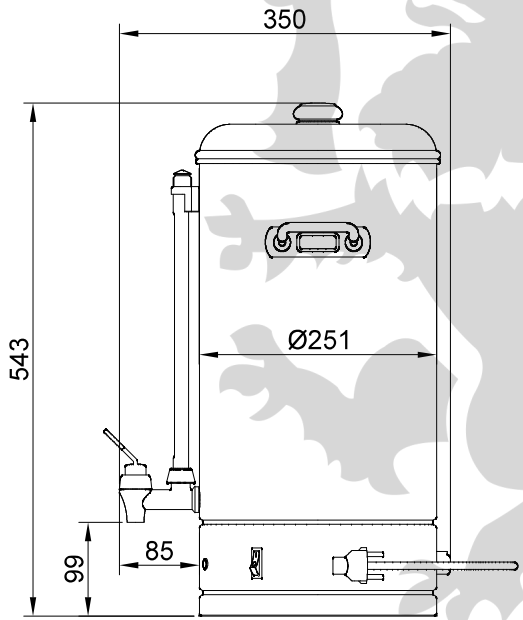

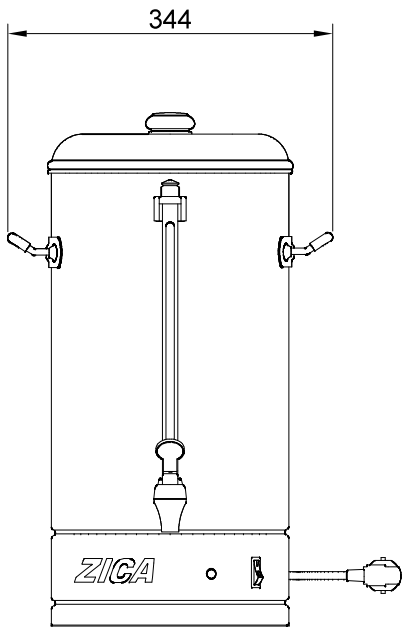

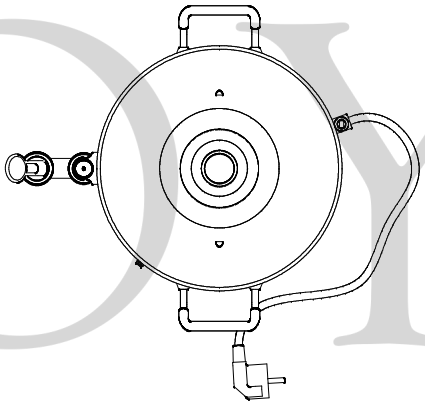

ROYAL catering	Coffee maker Item number: 10010888	10.07.2018	Scale: 1:8 Unit: mm	Page: 1/1